3. WEIGHT DISTRIBUTION AND LOAD LOCATION ON SINGLE CARS AND INTERMODAL TRAILERS AND CONTAINERS

3.1 Unless otherwise specified, the load distribution covered in this rule applies only to general service cars.

3.2 Unless otherwise allowed in specific figures, all load weights must be equally distributed end-to-end and side-to-side at origin. If ballast is needed to equalize weight distribution, refer to Rule 3.4.2.

3.3 For load distribution on 85-ft and 89-ft flatcars, including converted TOFC/COFC and multilevel flatcars, the shipper and originating carrier must confer with the car owner.

3.4 Load Distribution

3.4.1 Weight Limits

3.4.1.1 Truck Limits

The weight of load on a car must not exceed the load limit stenciled on the car. The weight of load on one truck must not exceed one-half of the load limit stenciled on the car. In case of doubt, this must be verified by weighing the car.

3.4.1.2 Lateral Limits

The load must be located so that the weight along both sides of the car is equal for the entire length of the load.

3.4.1.3 Floor Limits

Commodities having a concentrated load bearing footprint cannot exceed the floor rating of the car. If floor rating is unknown, use 130 psi on a wood deck car; 430 psi on a 3/8-in. steel deck/nailable steel floor; and 740 psi on a 1-in. steel deck car, at any point on the car deck. The car deck must be in suitable condition. If in doubt, contact the serving railroad.

3.4.1.4 Center of Gravity Limits

3.4.1.4.1 The combined center of gravity (CCOG) of the car and load must be at 98 in. or less above top of rail. If CCOG exceeds 98 in. above top of rail, load may be classified as a dimensional shipment and requires railway clearance and special handling (see General Rule 4). Contact origin carrier for further direction. (CCOG formula is provided in Part 5.)

3.4.1.4.2 Large and heavy material such as ingots, slabs, billets, molds, castings, machines, etc., not covered by individual figures, must be loaded with the largest dimension on the bottom for greater stability.

3.4.1.5 End-of-Car Limits

3.4.1.5.1 Load weight, uniformly distributed from truck centers to ends of car, must not exceed 15% of the stenciled load limit on each end. (See Fig. 3.1, Sketch 1.)

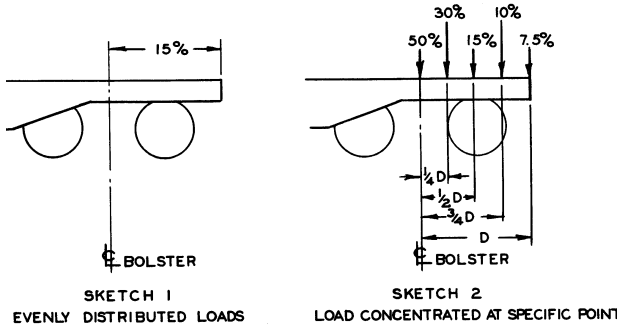

Fig. 3.1 Weight distribution from truck center to end sill

3.4.1.5.2 Point or concentrated loading between body bolster and end sill must not exceed the percentages shown in Table 3.1. (See Fig. 3.1, Sketch 2.)

Table 3.1 Load concentration between body bolster and end sill

Location of Load or Bearing Piece	Permissible Concentrated Load Percentage of Stenciled Load Limit
C/L of bolster	50%
1/4 distance between bolster center and end sill	30%
1/2 distance between bolster center and end sill	15%
3/4 distance between bolster center and end sill	10%
At end sill	7.5%

3.4.2 Ballast

3.4.2.1 If the weight of a load cannot be equally distributed across a car, suitable ballast must be used to equalize the weight. The counterweight ballast must be secured in accordance with General Rule 5. The weight of the counterweight and its securement must be considered part of the total load weight and meet proper load distribution requirements. The structural integrity of the counterweight/ballast, regardless of its construction material, must be sufficient to withstand securement to the car and rail forces as defined in General Rule 5.3.

3.4.2.2 To determine how much ballast is required to balance the load, take the weight of the load in pounds (W); multiply it by the distance of the center of gravity from the centerline of the load relative to the centerline of the railcar in inches (D); and divide by the distance in inches (d) available on the car to offset the imbalance.

$$\text{Weight of ballast} = \frac{W \times D}{d}$$

3.4.2.3 To determine the location of the given weight of the ballast in pounds (w) to offset the imbalance, take the weight of the load in pounds (W); multiply it by the distance of the center of gravity of the load relative to the centerline of the railcar in inches (D); and divide by the ballast weight in pounds.

$$\text{Location of ballast from centerline of car} = \frac{W \times D}{w}$$

3.4.3 Securement

3.4.3.1 Regardless of the vacant space across a car, the load must be secured to prevent any portion of the load from shifting, resulting in a potential off-balance condition and/or displacement of the load from the car.

3.4.3.2 Unless otherwise specified in a figure, all tubular products in the same layer must be of the same height. Not applicable for loads with maximum height below top of gondola car sides.

3.4.3.3 Machines and other items having high centers of gravity or narrow bases must be secured to ensure their stability in transit.

3.4.3.4 Partial unloading of a commodity from a car is not recommended. In the event that a load is partially unloaded, the remainder of the load on the car must comply with, or be arranged to comply with, an existing figure or the General Rules before further movement.

IMPLEMENTED 03/2016